TRAXXAS

E REVO

Transmission Assembly

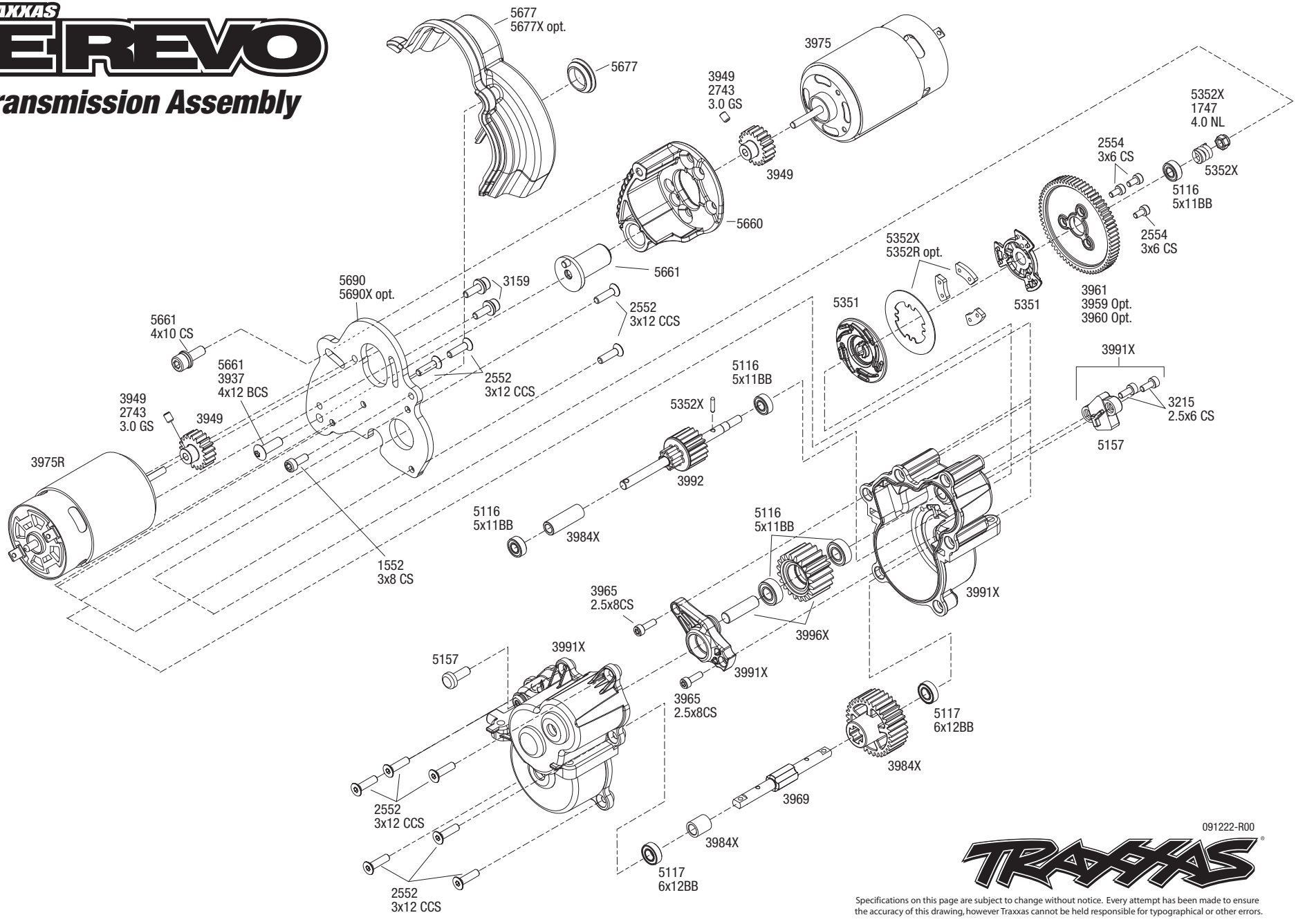

091222-R00

TRAXXAS®

Specifications on this page are subject to change without notice. Every attempt has been made to ensure the accuracy of this drawing, however Traxxas cannot be held responsible for typographical or other errors.